ENERPAC Specification Sheet

DATE 2023/01/28 改 Japan

PRODUCT DESCRIPTION 30 TON PULLPAC

ENERPAC BUTLER, WISCONSIN 53007 TELEPHONE (414) 781 6600 TELEX 026 682 DIVISION OF APPLIED POWER INDUSTRIES INC

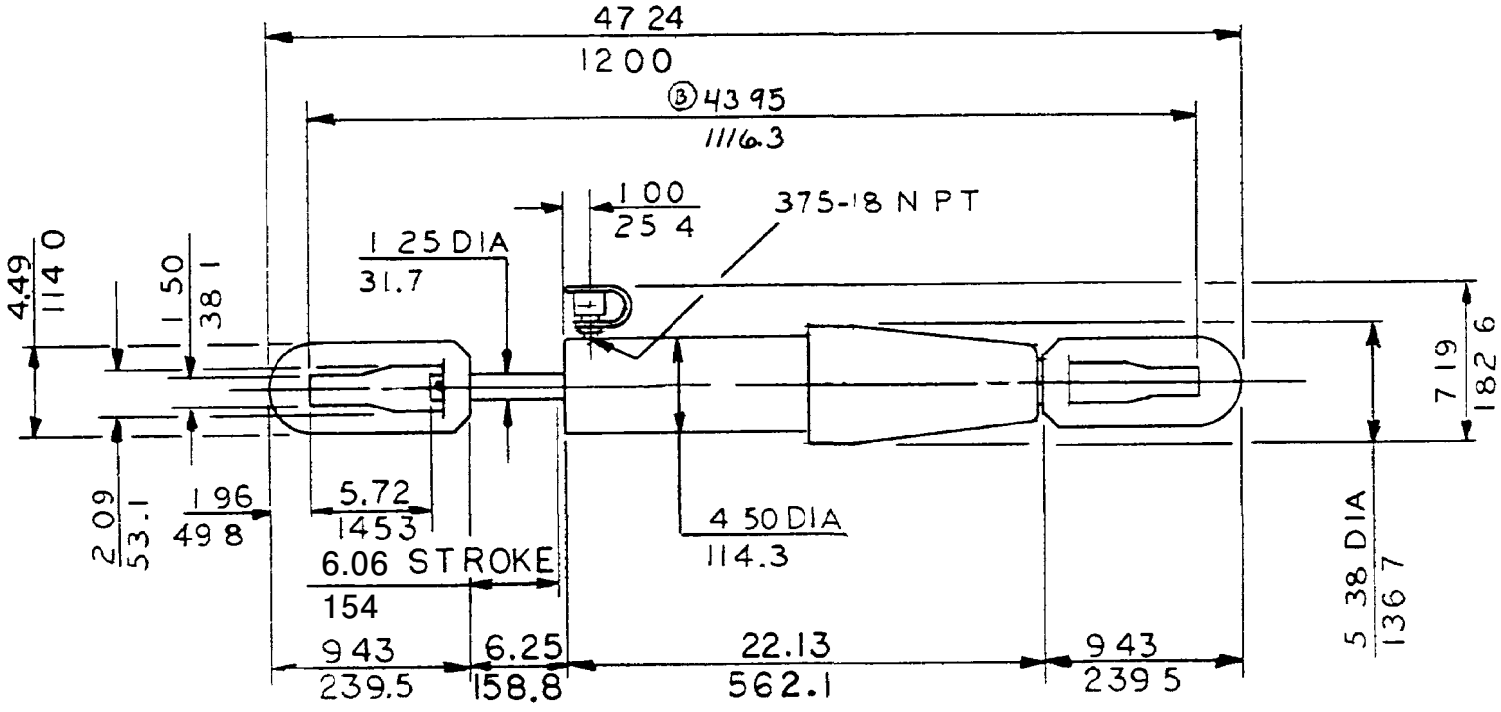

STROKE- 6.06/154

BORE DIA-3 50/88.9

PLUNGER DIA-2 50/63 5

EFFECTIVE AREA-7 216SQ. IN/46.6 SQ CM

OIL CAPACITY-43 27 CU IN / 709 3 CU CM

ITERNAL PRESSURE AT RATED LOAD - 8,320 PS I / 57,3647 KN/m²

CAPACITY 30TONS/325kN

WT

INCHES
MILLIMETERS

D 34892

ID NO 1609

MODEL NO BRP-306